智高遊戲積木繪本

機器人 羅比

Robots

JUNIOR ENGINEER

7268

53 PCS

3+

ROBOTS

10 MODELS TO BUILD

LET'S PLAY BLOCKS WITH AWESOME STORYBOOK

目錄	Index			p1
零件表	Part List			p2
模型	Model 1	羅比	Robot Man	p3
模型	Model 2	維尼	Head Spinning Robot Winnie	p7
模型	Model 3	珊咪	Flying Robot Sammy	p11
模型	Model 4	佛萊迪	Robot Arm Freddy	p15
模型	Model 5	強尼	Three Wheel Robot Johnny	p19
模型	Model 6	郝迪	Long Tail Robot Howdy	p22
模型	Model 7	肯尼	Crane Robot Kenny	p25
模型	Model 8	羅西	Ninja Robot Rosie	p28
模型	Model 9	洛基	Crocodile Robot Rocky	p31
模型	Model 10	路可	Duck Robot Luke	p34

零件表 | PART LIST

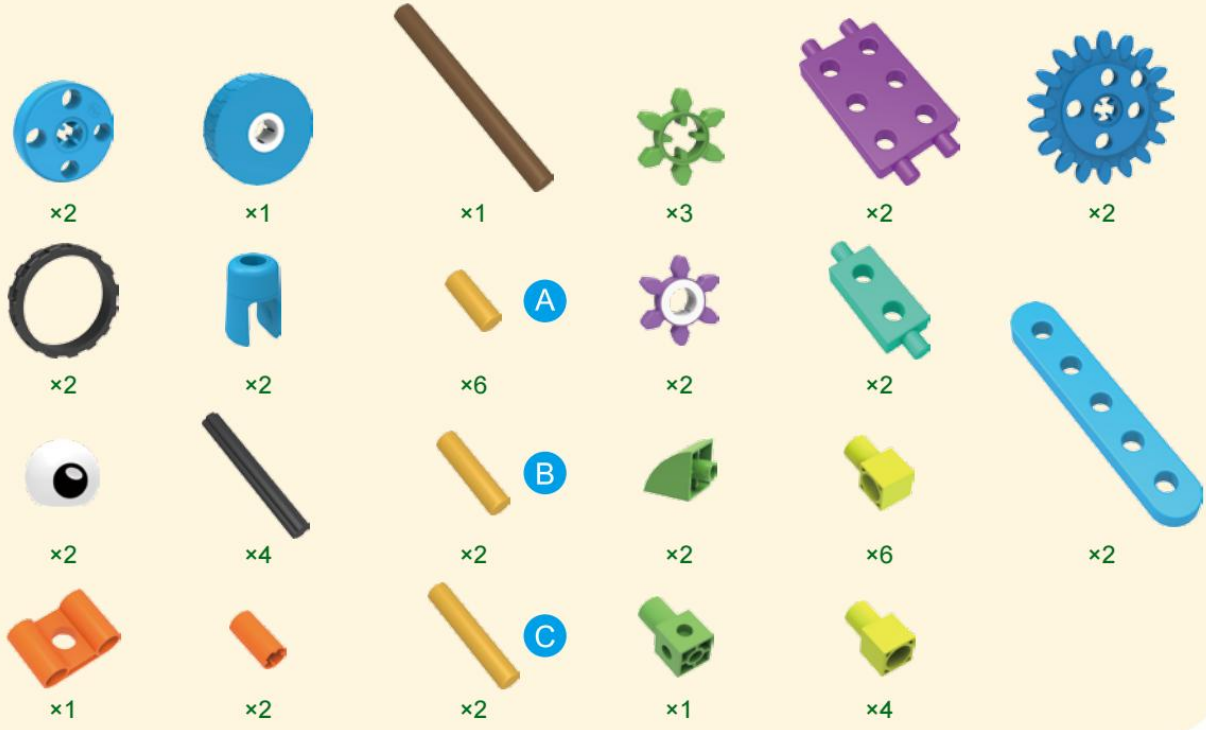

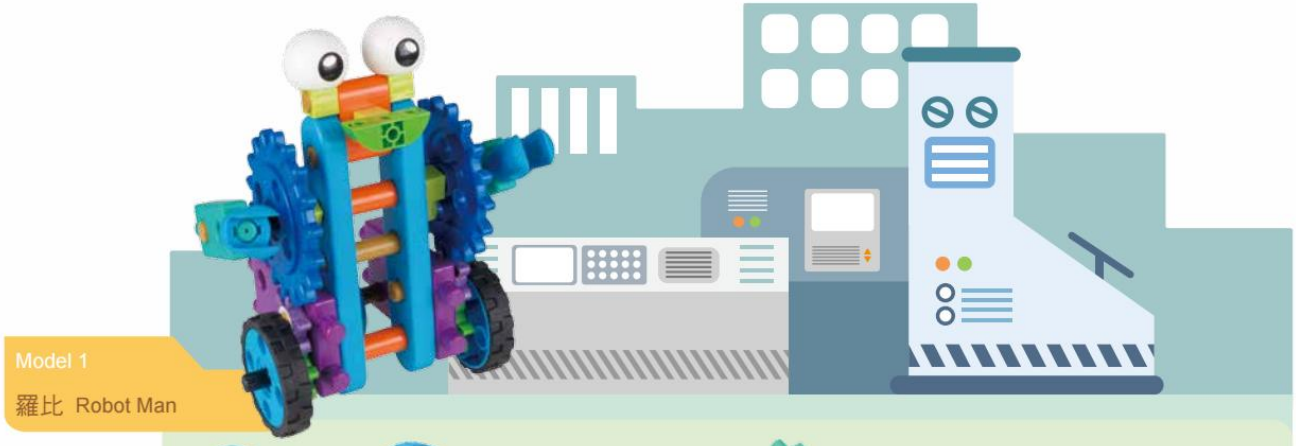

Model 1

羅比 Robot Man

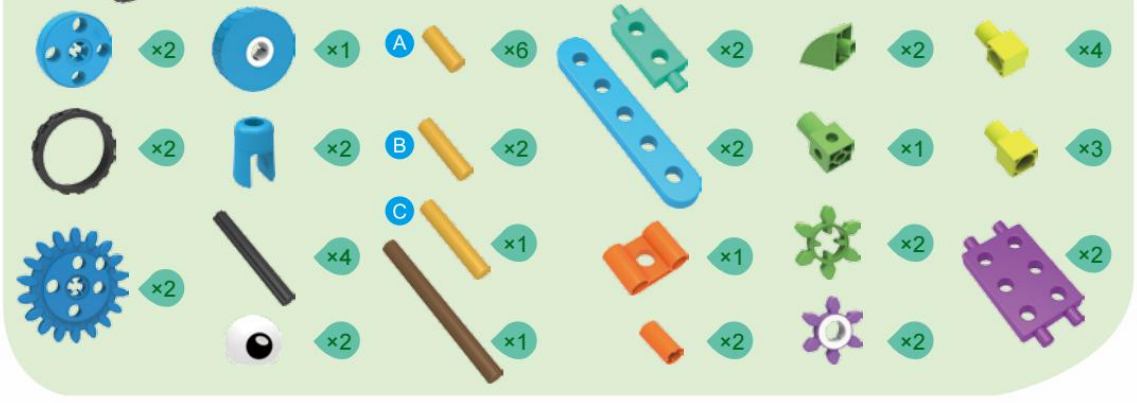

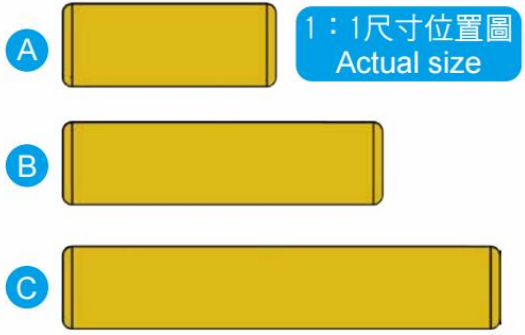
A
B
C
1：1尺寸位置圖
Actual size

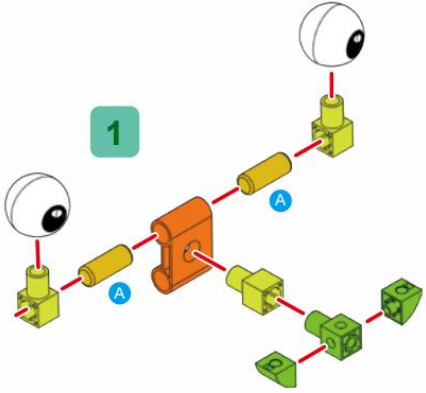
1
A
A

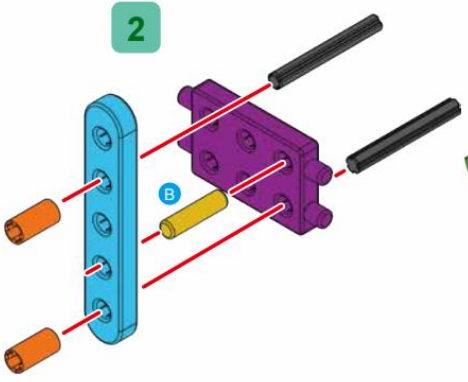
2
B

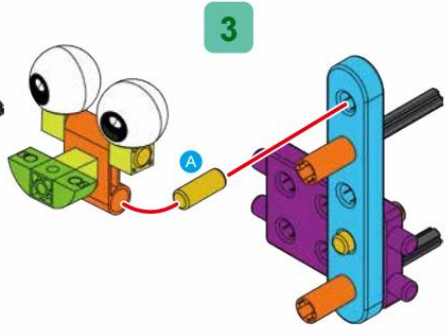
3
A

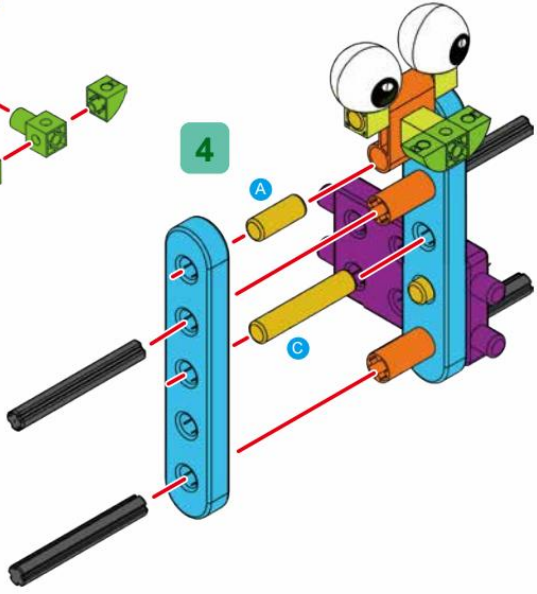
4
A
C

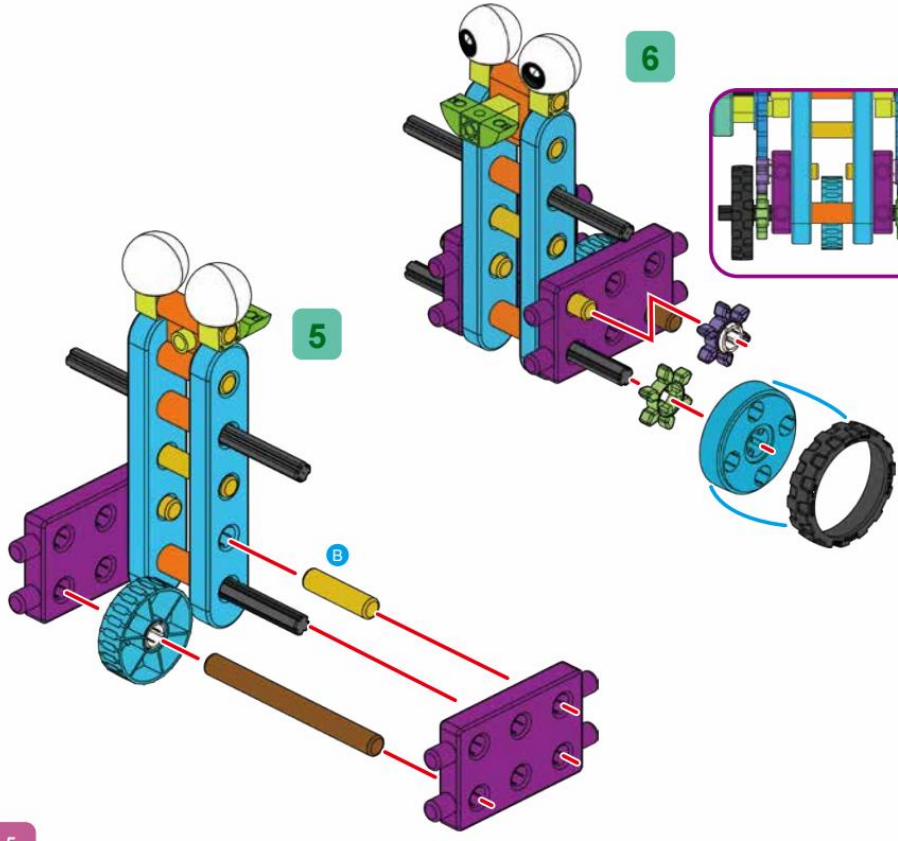
5
B
6

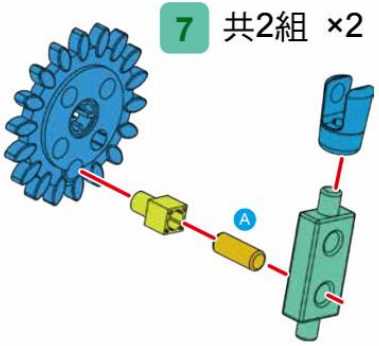
7
共2組 ×2
A

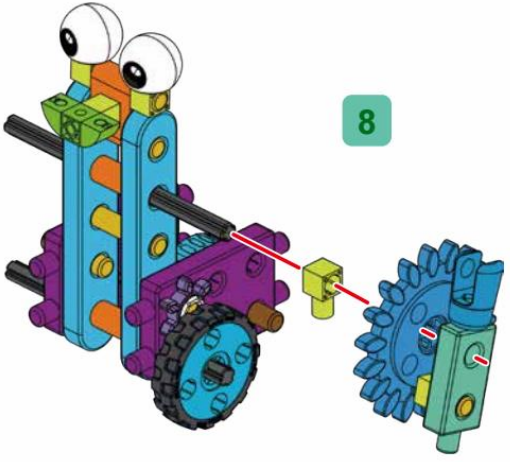
8

9

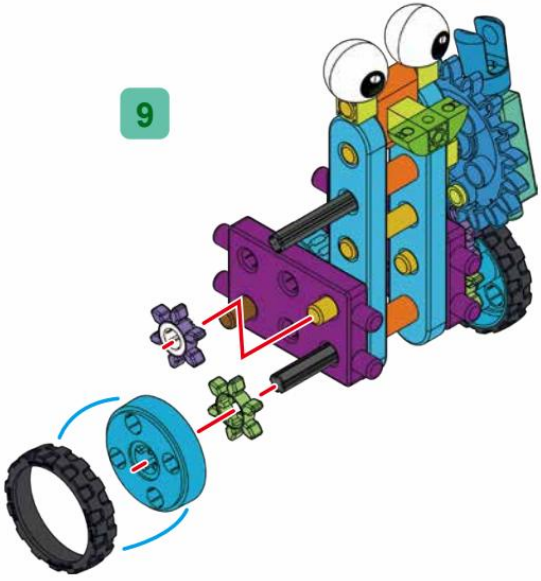

10

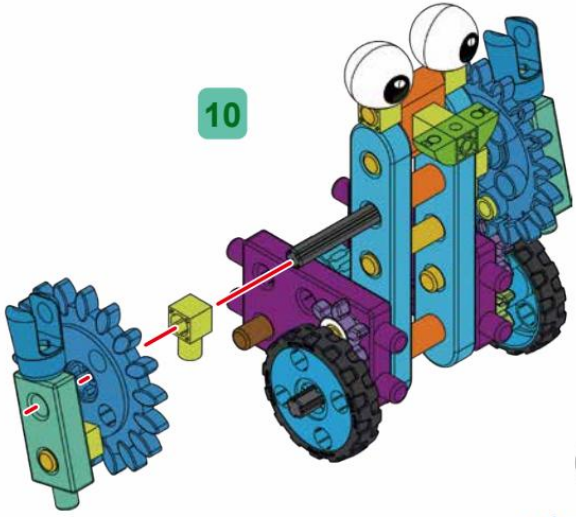

★ 組裝完成囉！
COMPLETED!

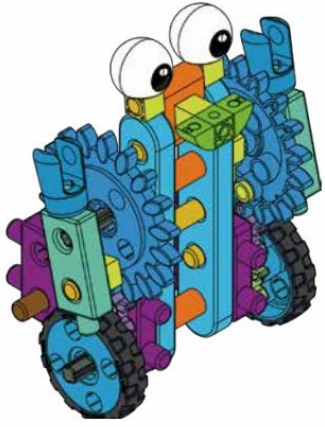

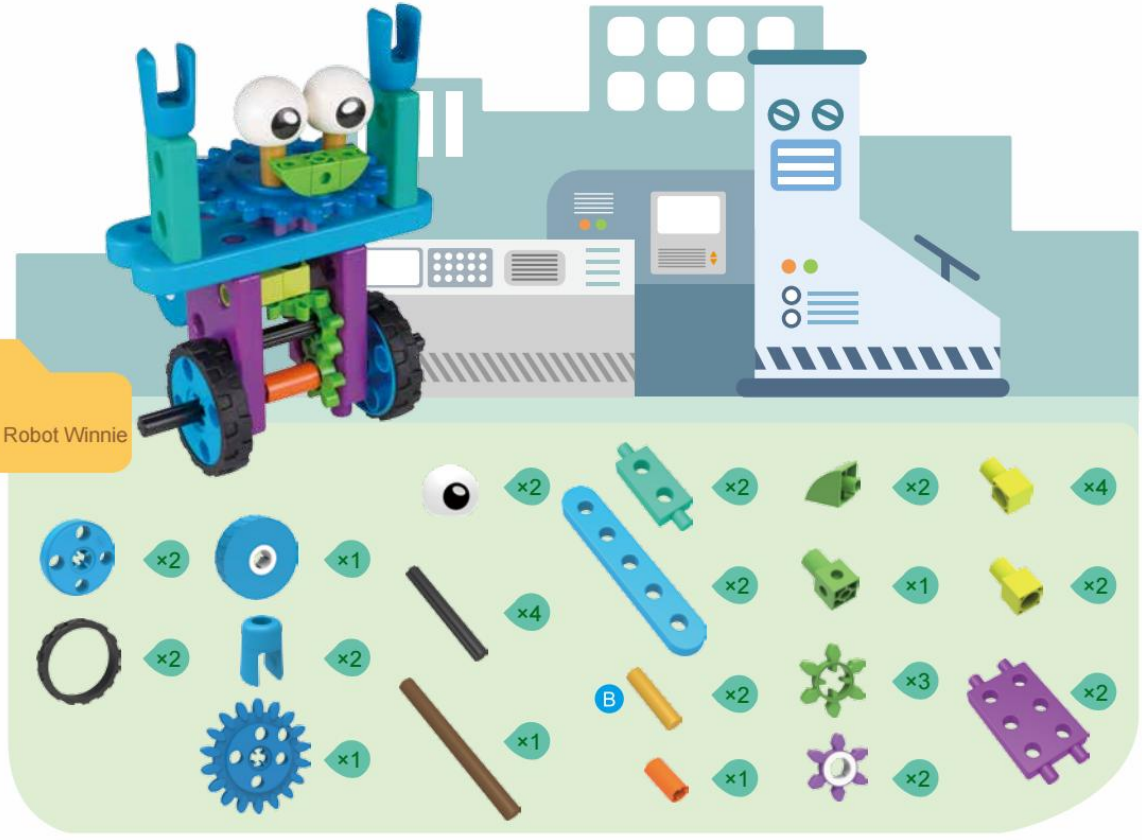

Model 2

維尼
Head Spinning Robot Winnie

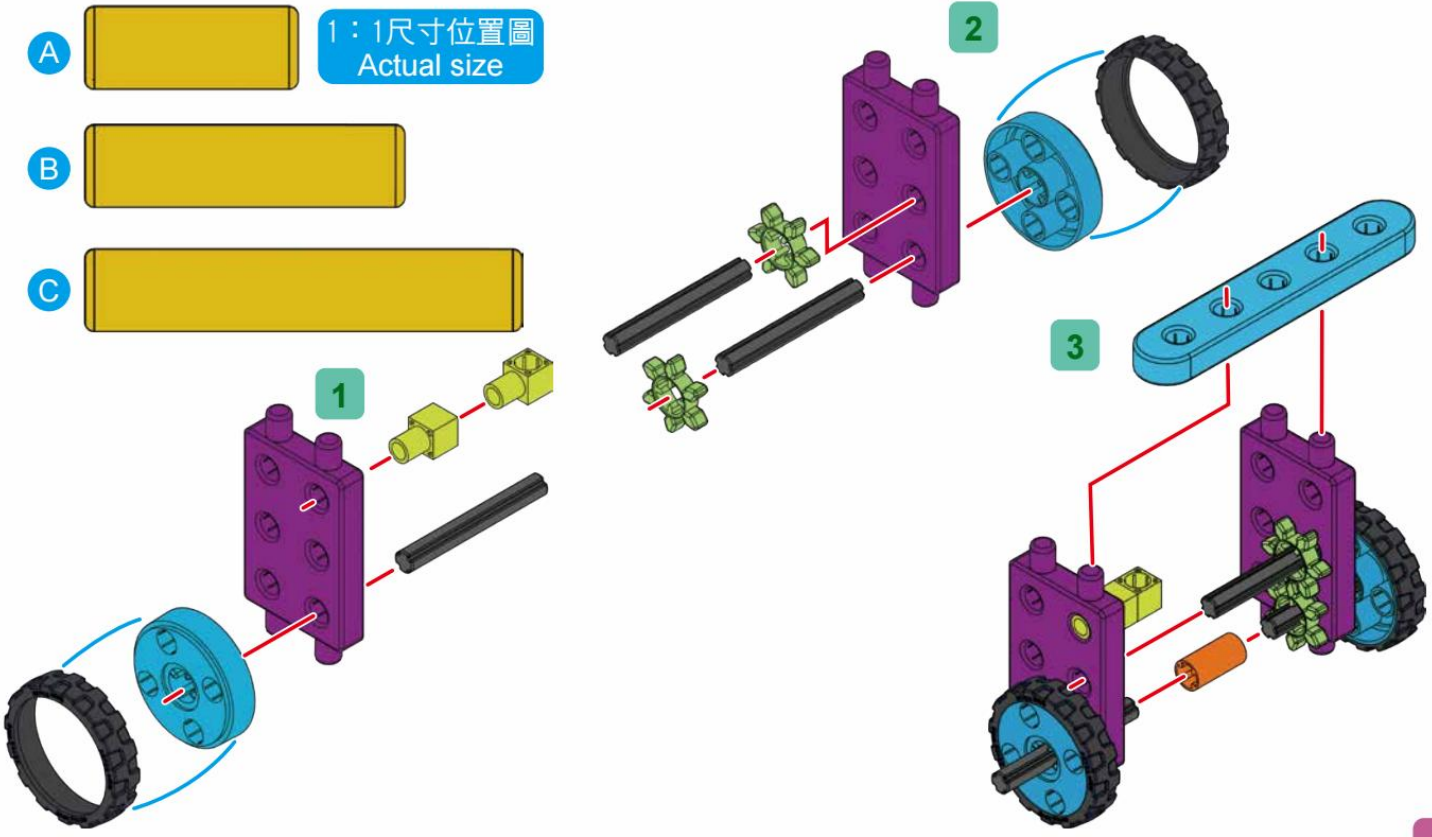
A
B
C
1：1尺寸位置圖
Actual size
1
2
3

4

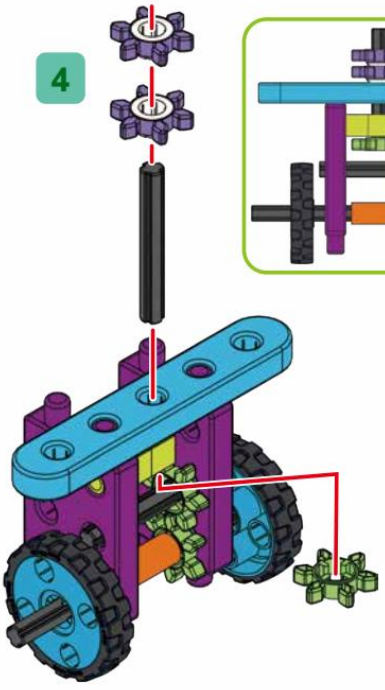

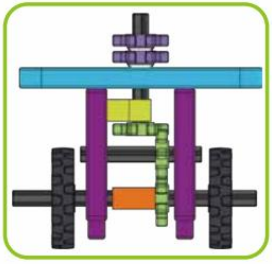

5

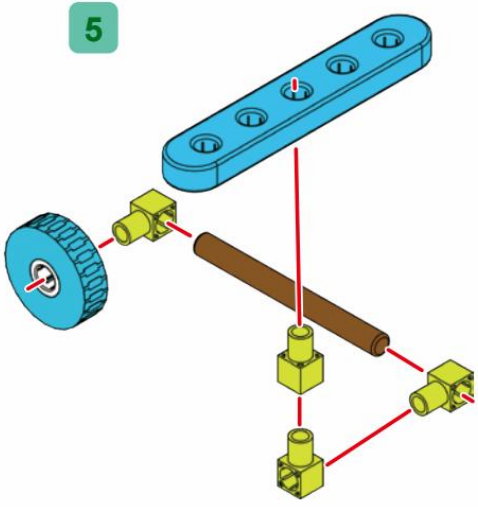

6

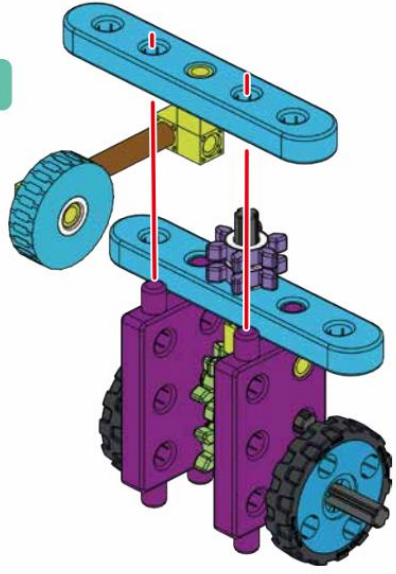

7

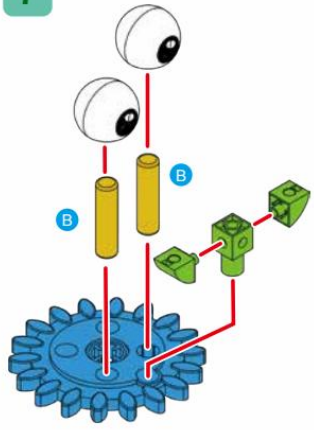

8

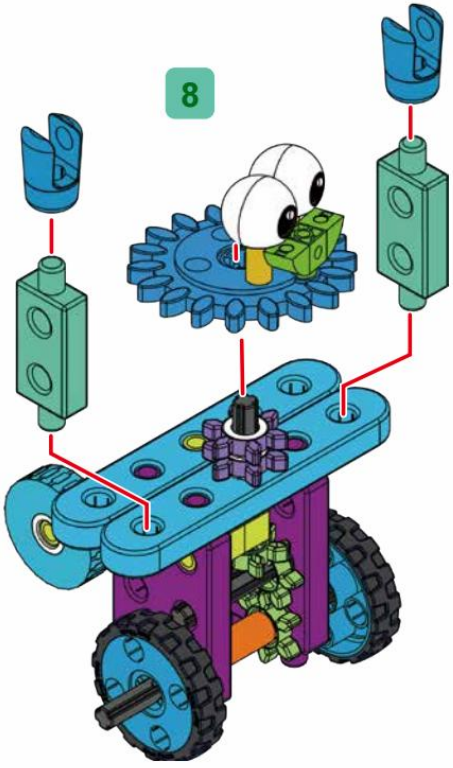

★ 組裝完成囉！
COMPLETED!

Model 3

珊咪 Flying Robot Sammy

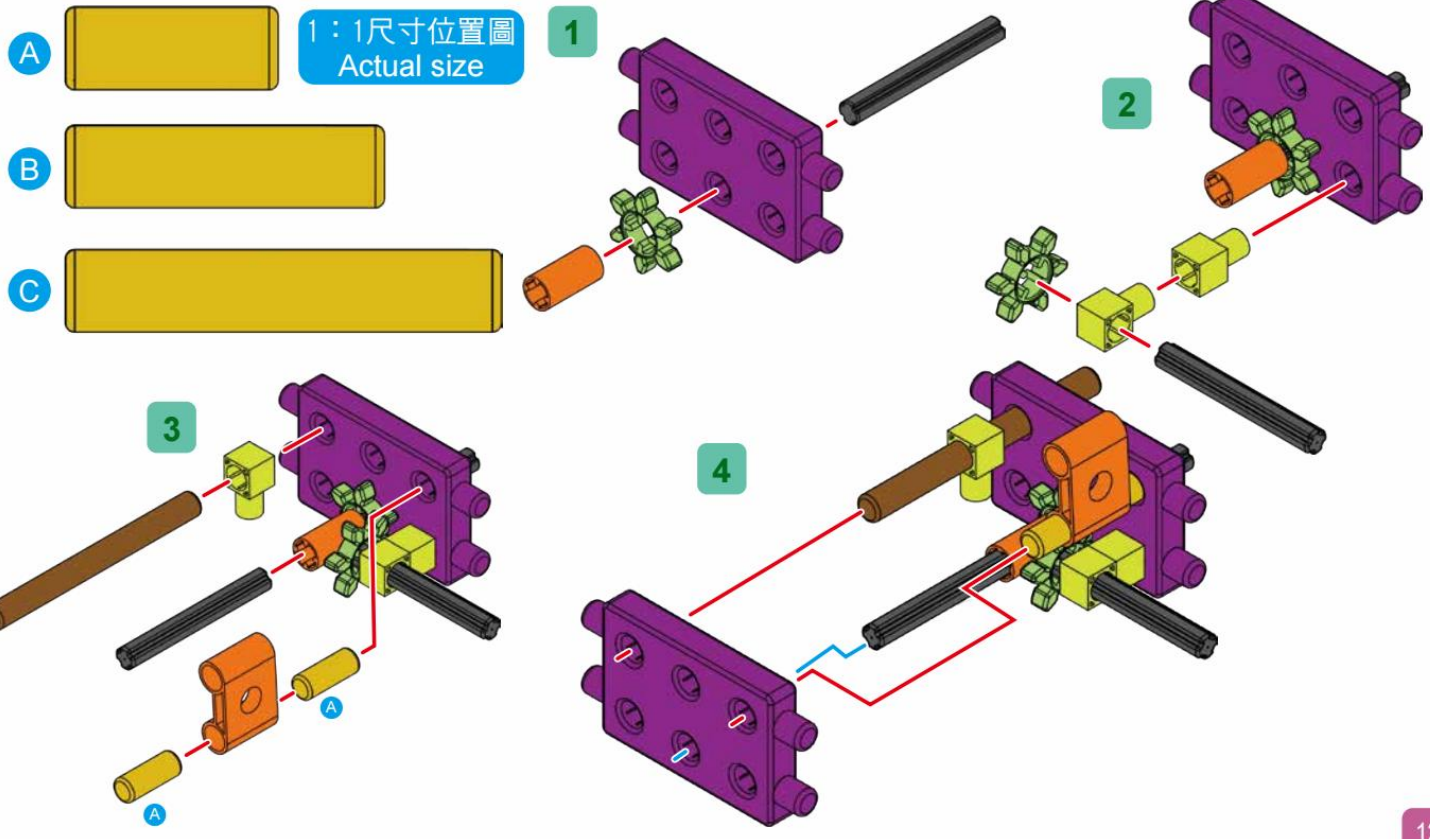
A
B
C
1：1尺寸位置圖
Actual size
1
2
3
4
A
A

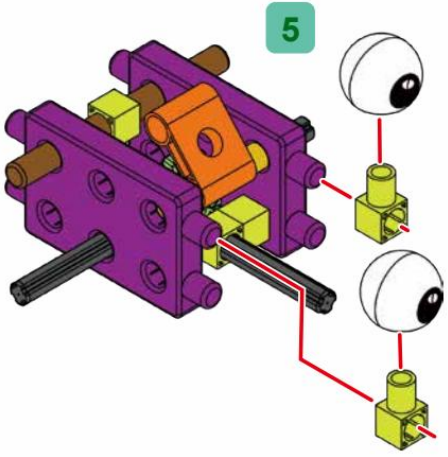
5

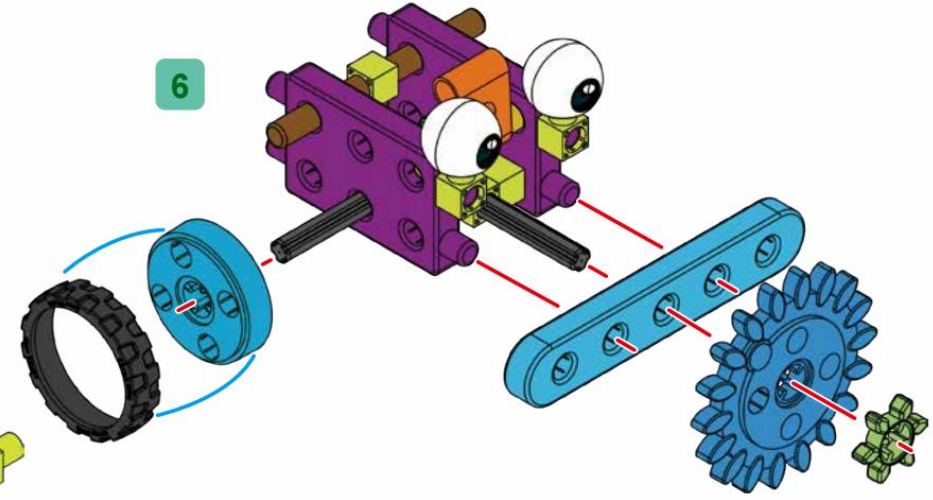
6

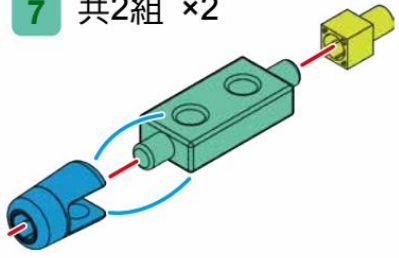
7 共2組 ×2

8

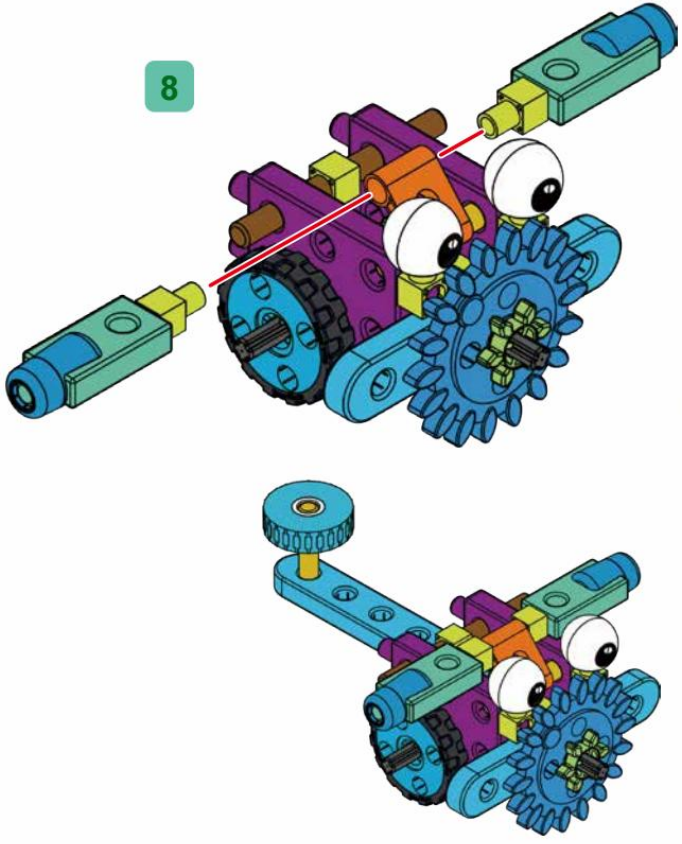

9

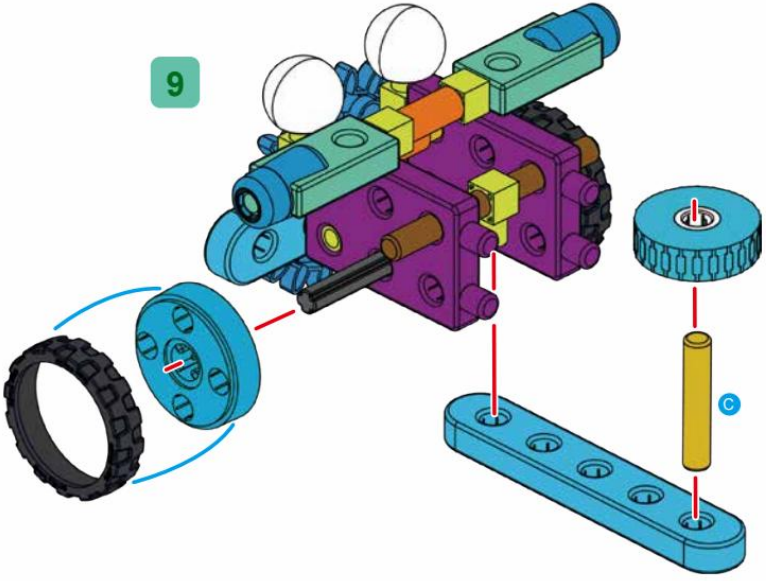

★ 組裝完成囉！
COMPLETED!

Model 4

佛萊迪 Robot Arm Freddy

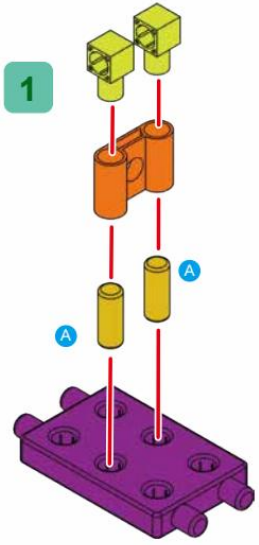
1
A
A

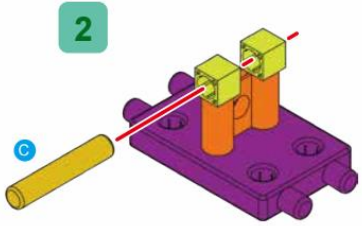
2
C

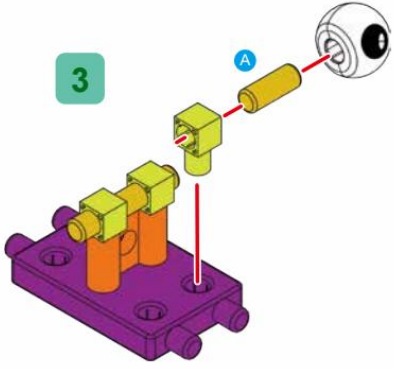
3
A

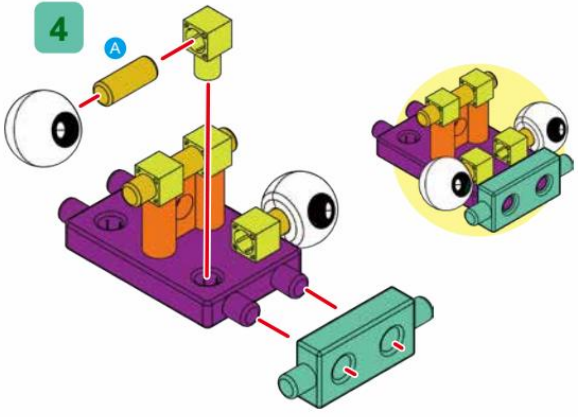
4
A

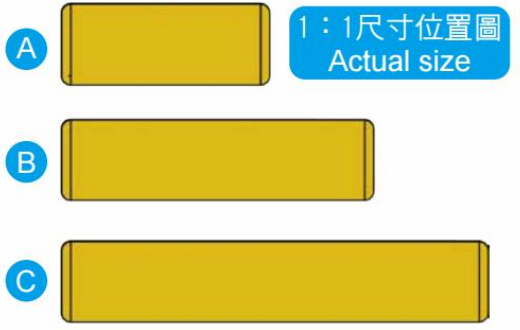
A
B
C
1：1尺寸位置圖
Actual size

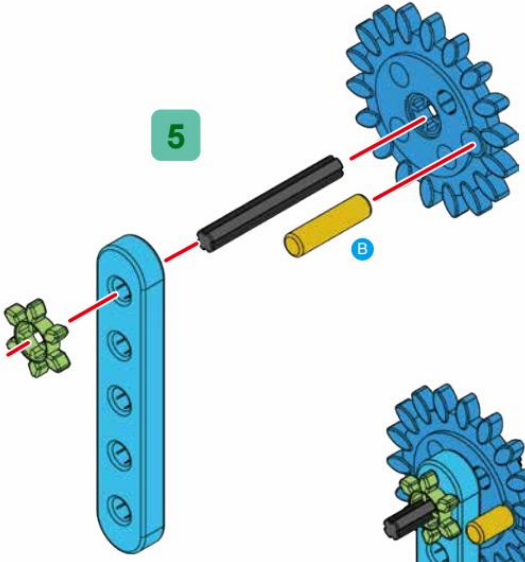
5
B

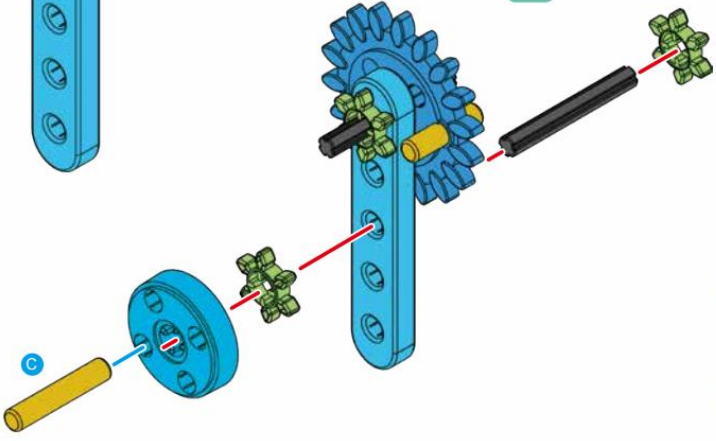
6
C

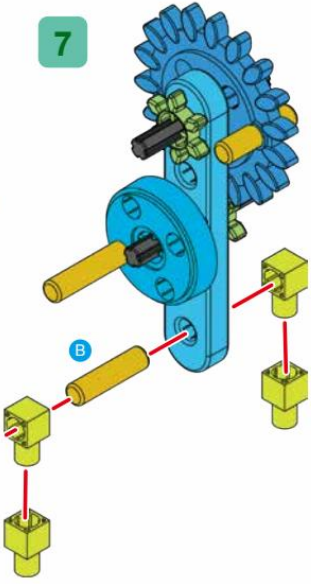
7
B

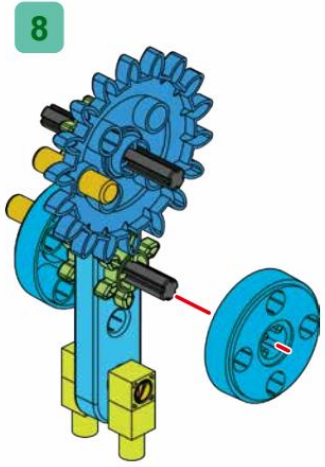
8

9

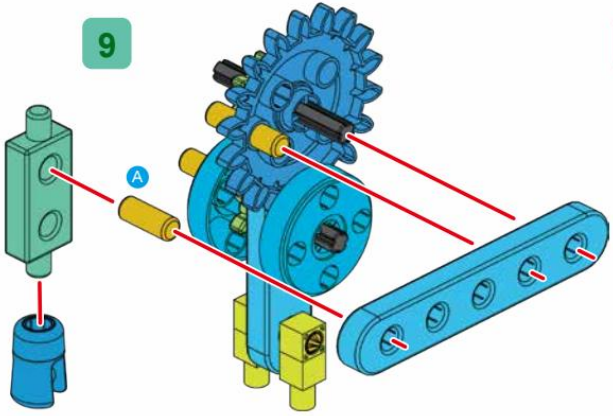

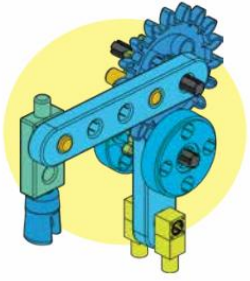

10

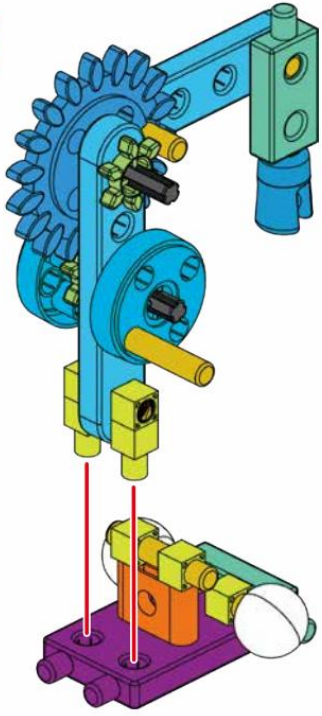

★ 組裝完成囉！
COMPLETED!

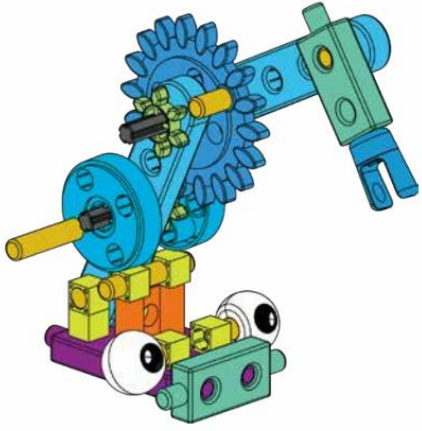

Model 5

強尼
Three Wheel Robot Johnny

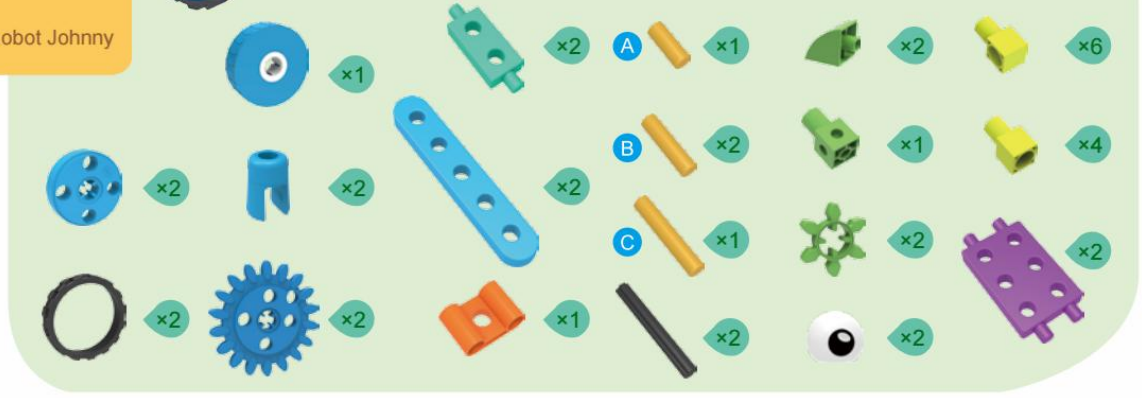

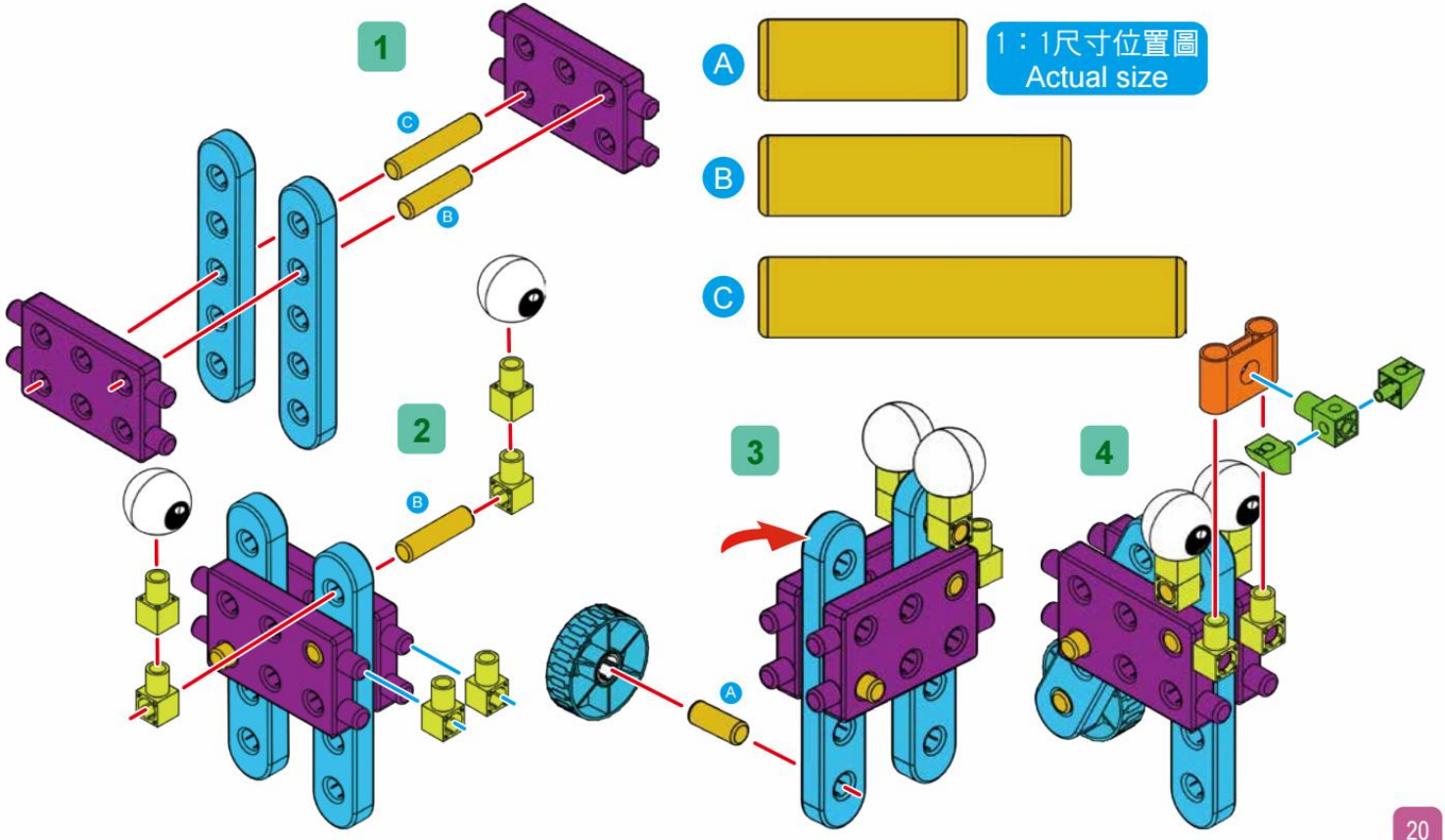
1
C
B
2
B
3
A
4
A
B
C
1：1尺寸位置圖
Actual size

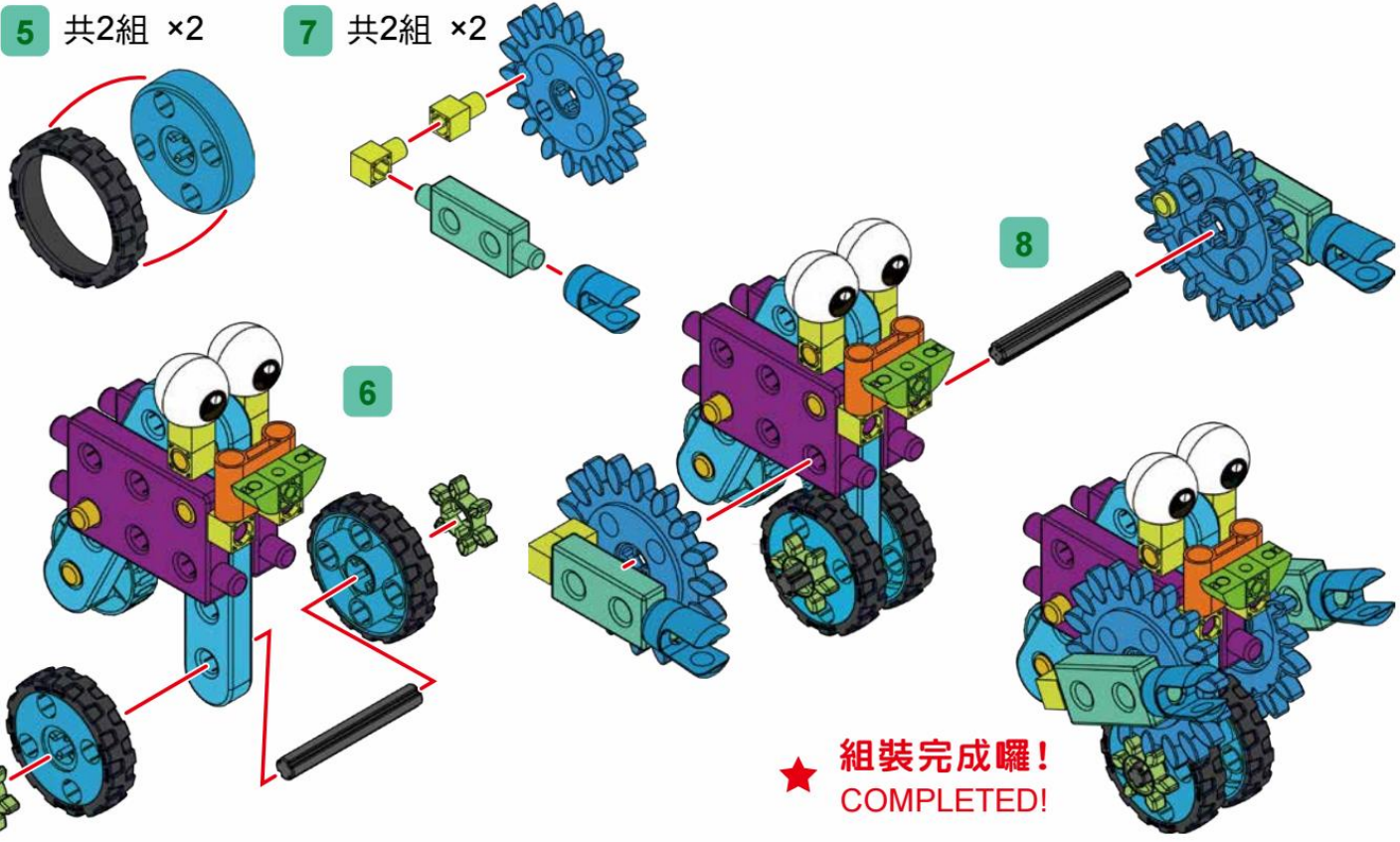
5 共2組 ×2
7 共2組 ×2
8
6
★ 組裝完成囉！
COMPLETED!

Model 6

郝迪
Long Tail Robot Howdy

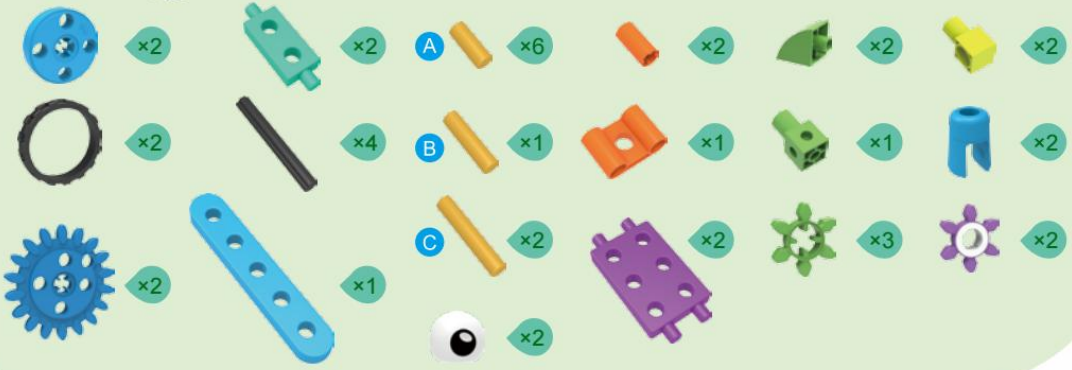

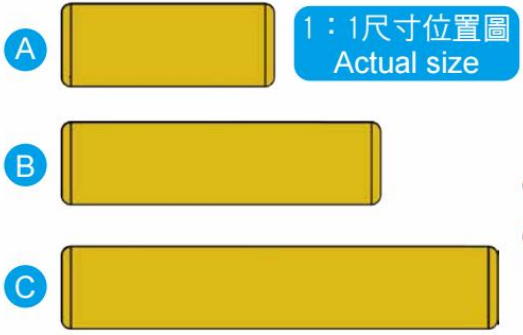

1：1尺寸位置圖
Actual size

1

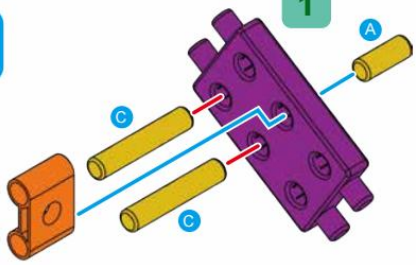

2

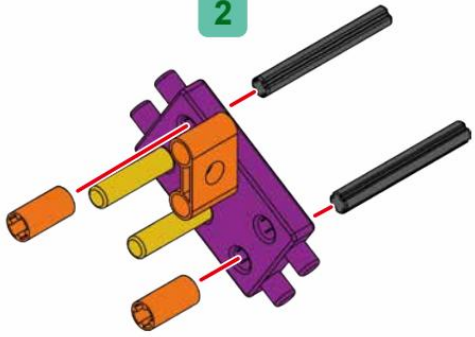

3

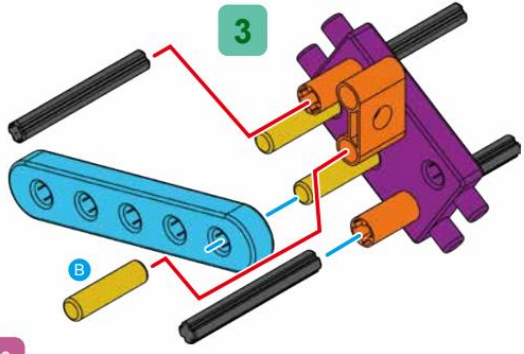

4

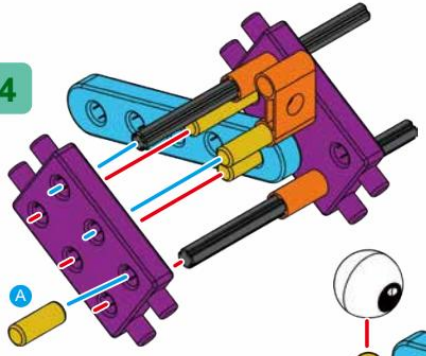

5

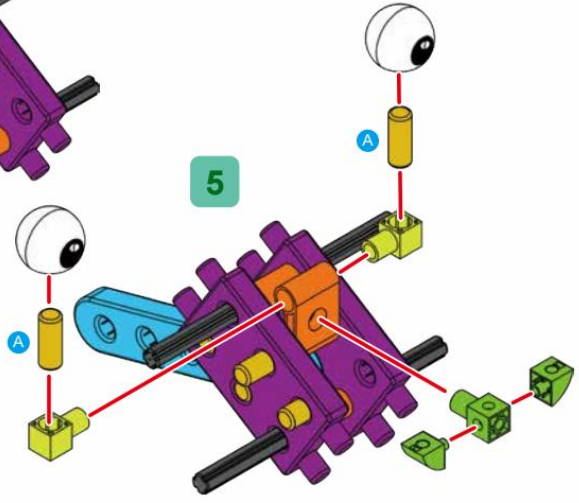

6

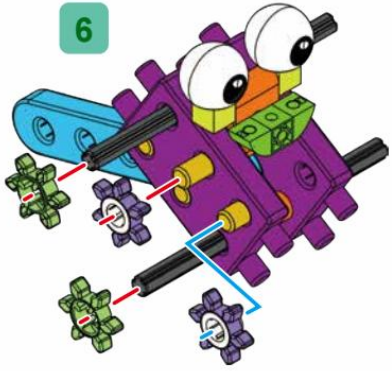

7 共2組 ×2

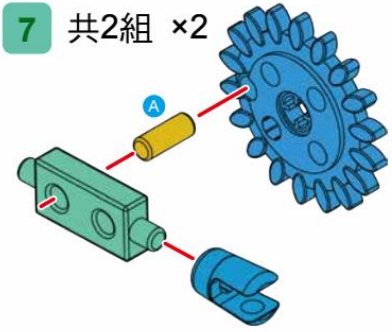

9

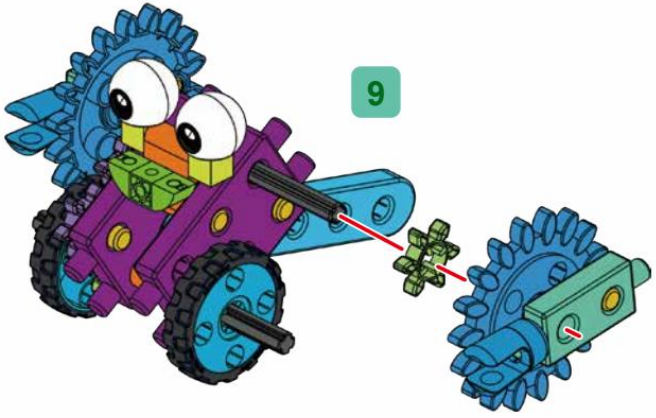

8

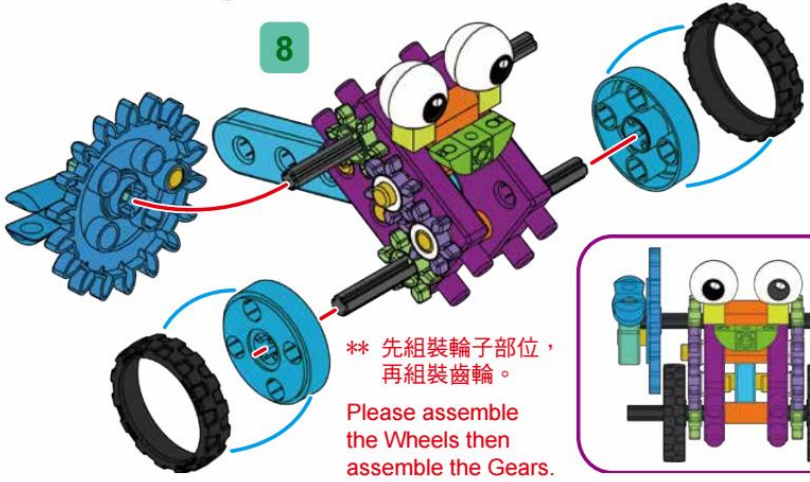

** 先組裝輪子部位，
再組裝齒輪。

Please assemble the Wheels then assemble the Gears.

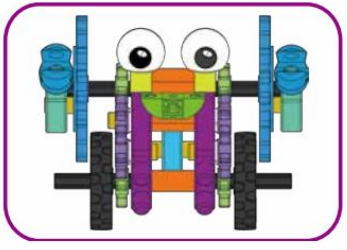

★ 組裝完成囉！
COMPLETED!

Model 7

肯尼
Crane Robot Kenny

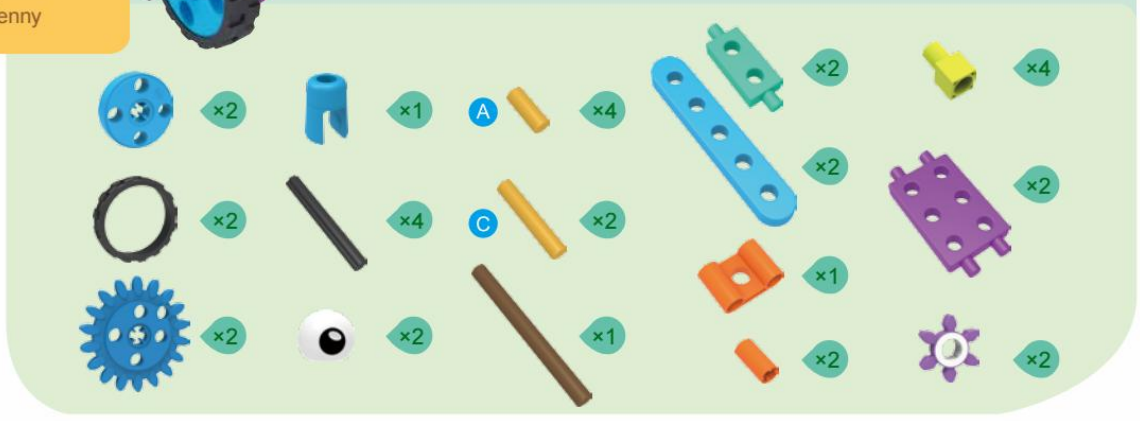

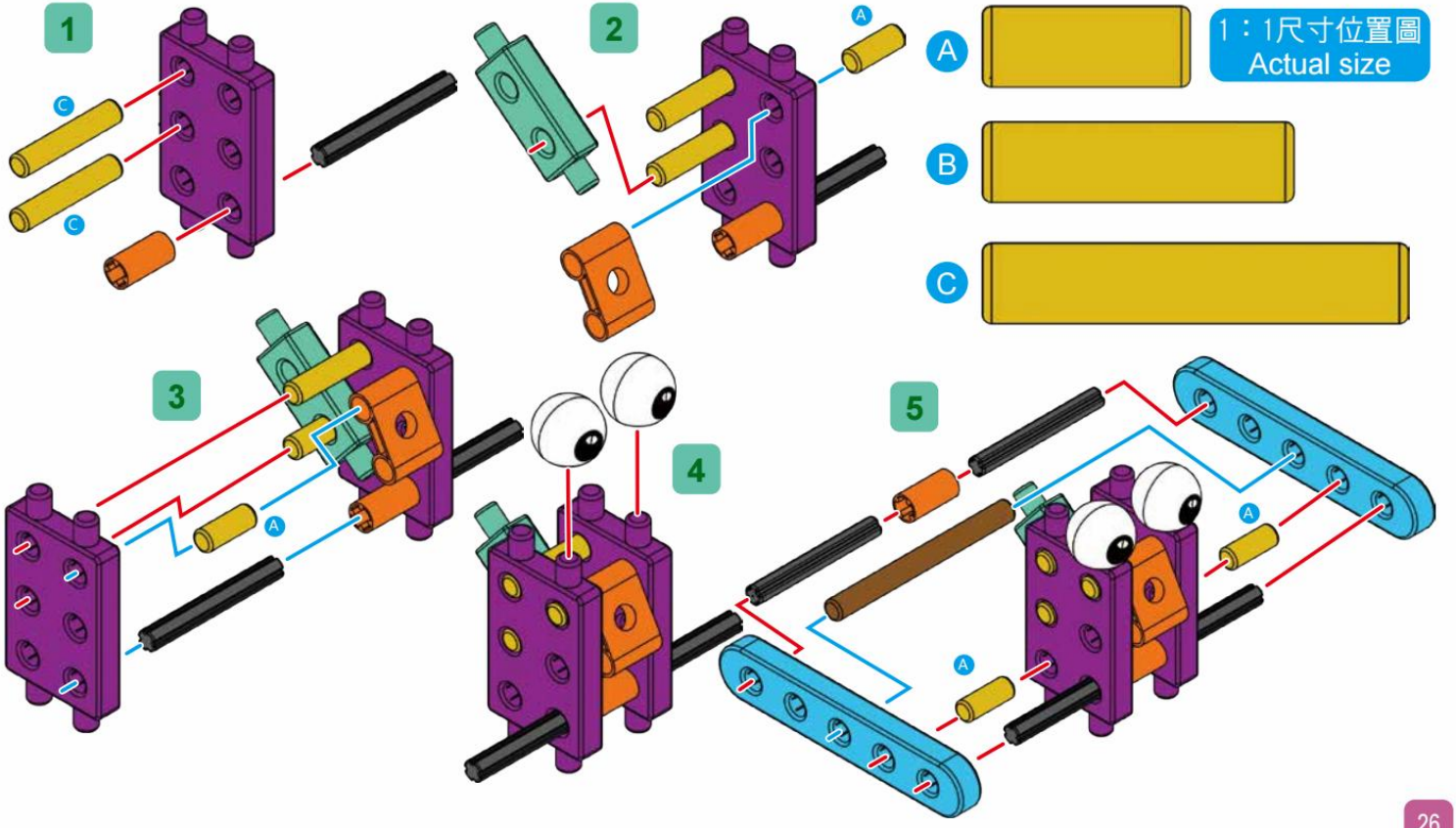
1
C
C
2
A
3
A
4
5
A
A
A
B
C
1：1尺寸位置圖
Actual size

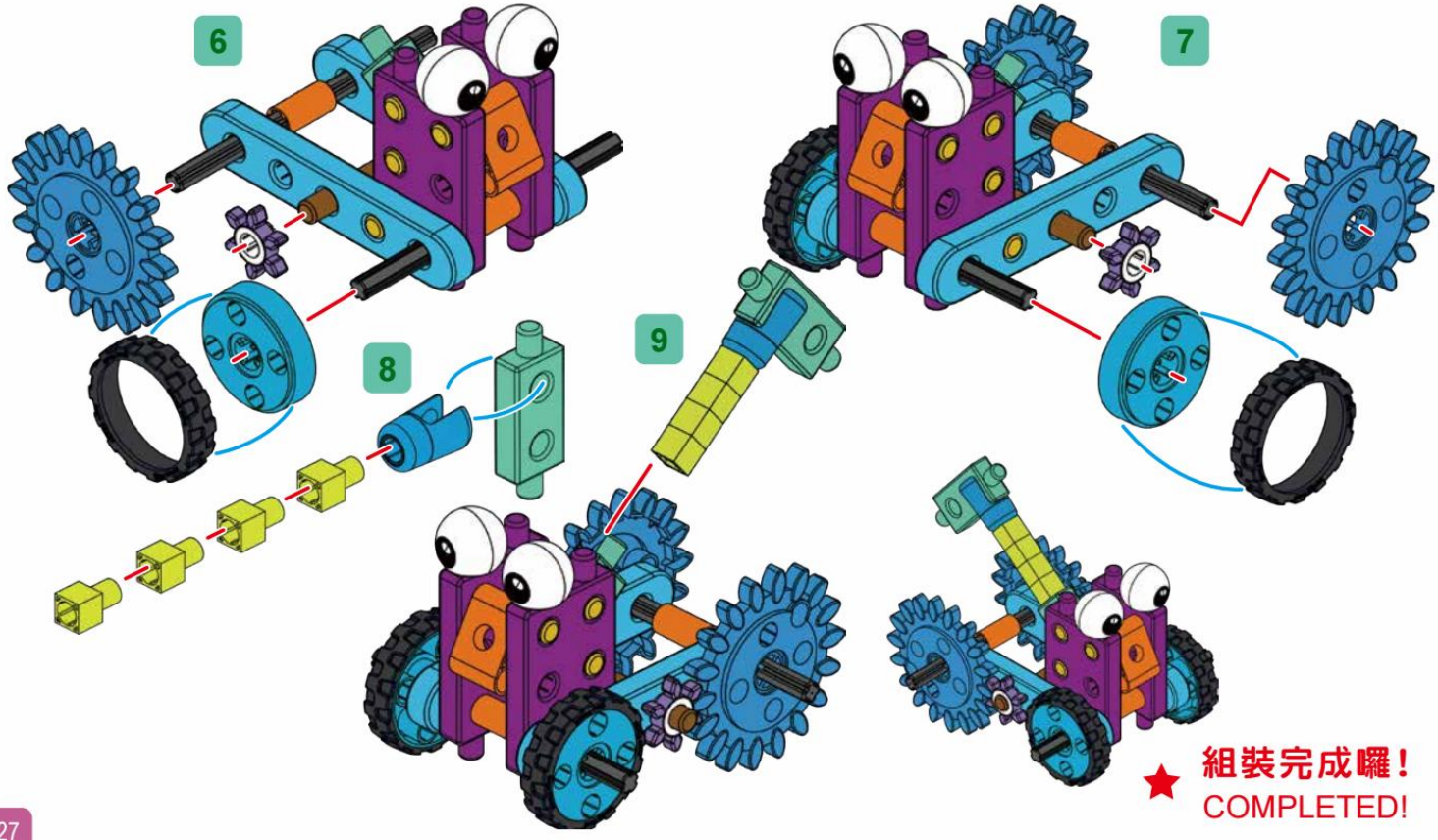
6
7
8
9
組裝完成囉！
COMPLETED!

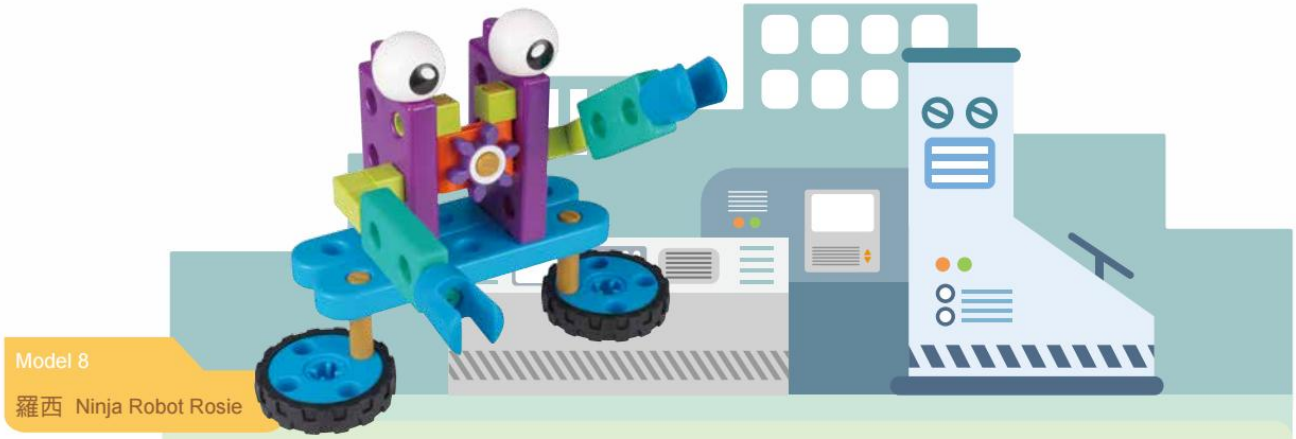

Model 8

羅西 Ninja Robot Rosie

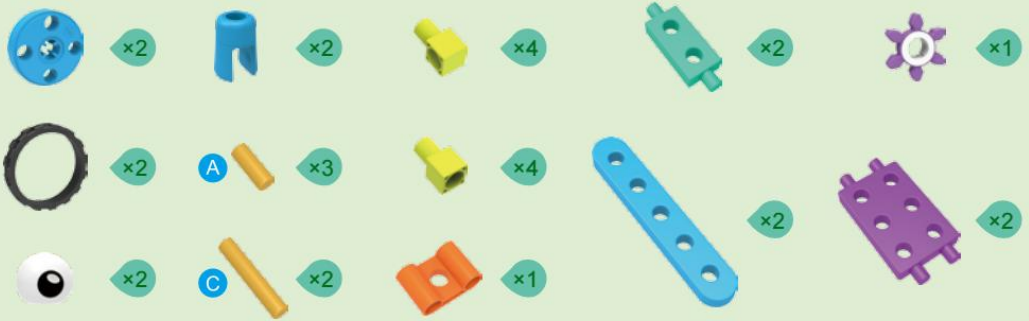

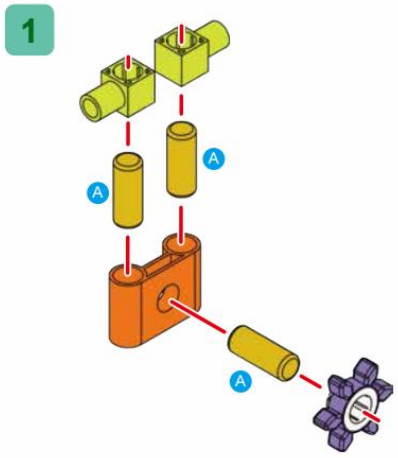

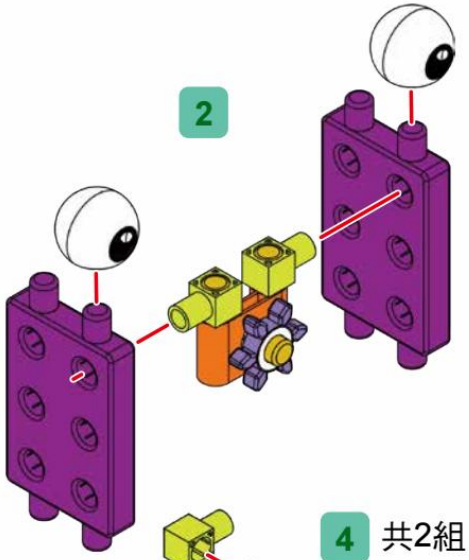

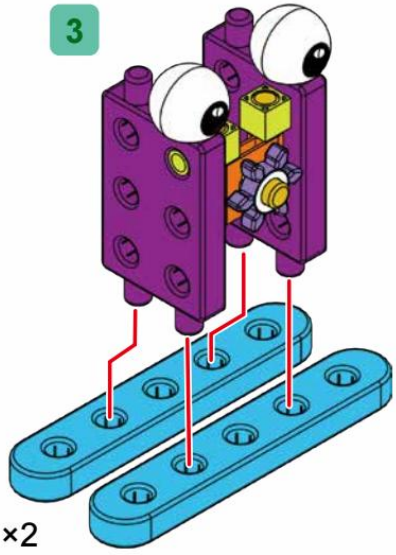

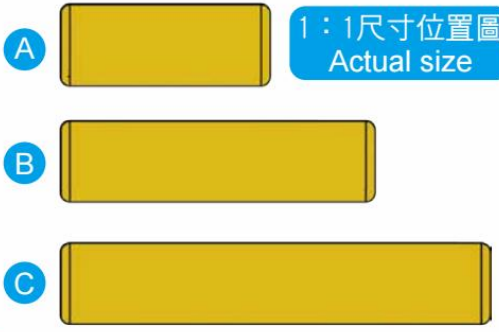

1：1尺寸位置圖
Actual size

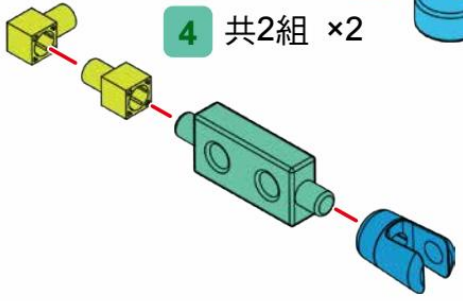

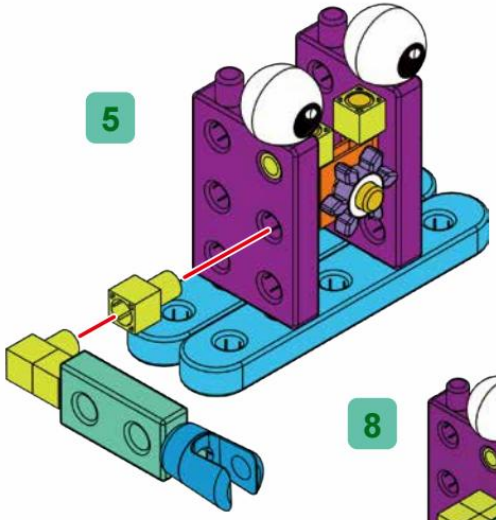

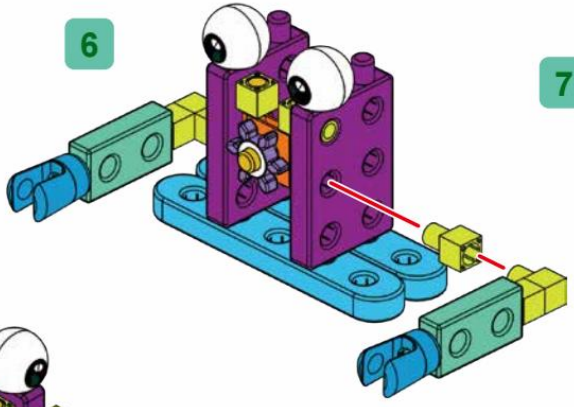

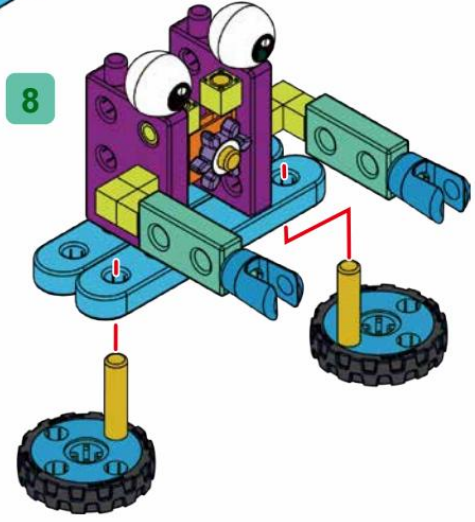

★ 組裝完成囉！
COMPLETED!

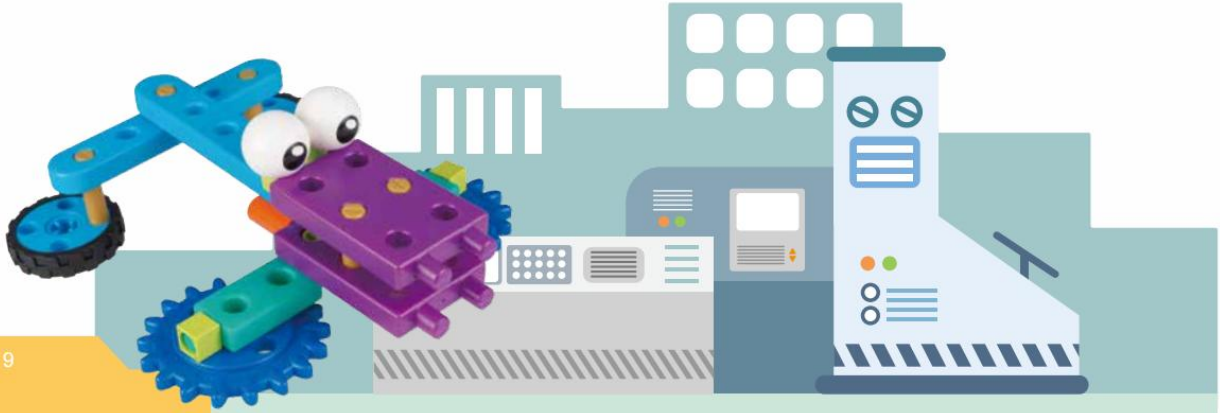

Model 9

洛基
Crocodile Robot Rocky

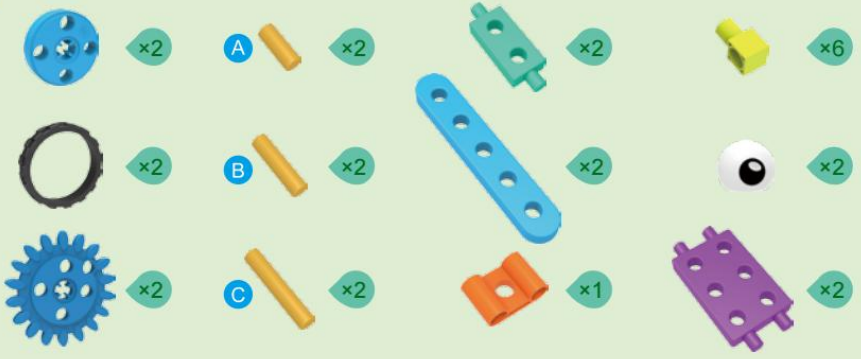

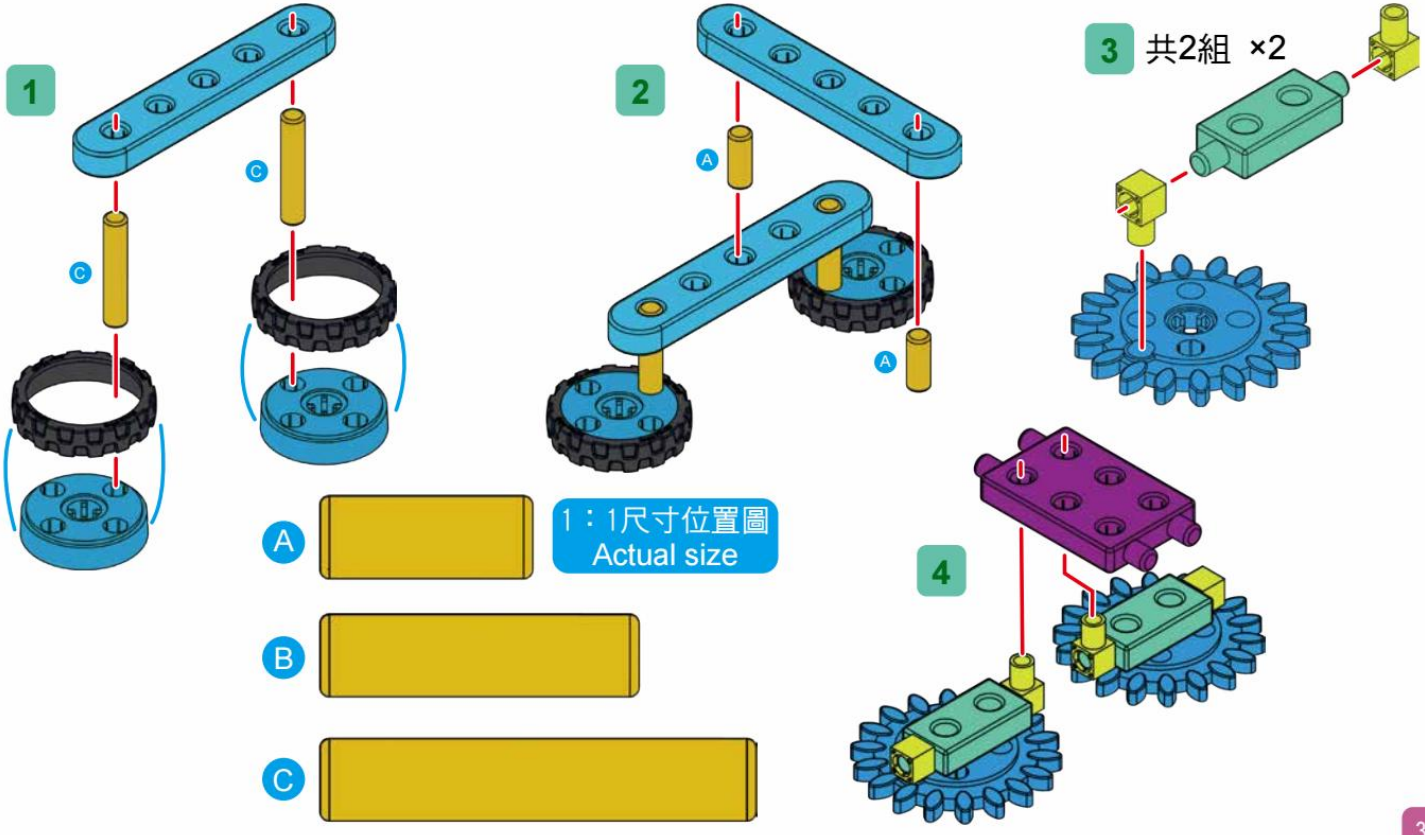
1
C
C
2
A
A
3 共2組 ×2
4
A
B
C
1：1尺寸位置圖
Actual size

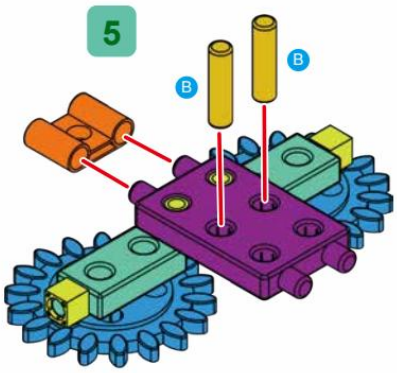

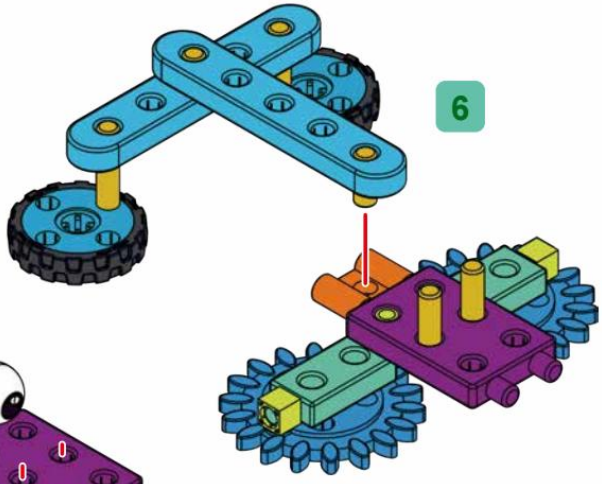

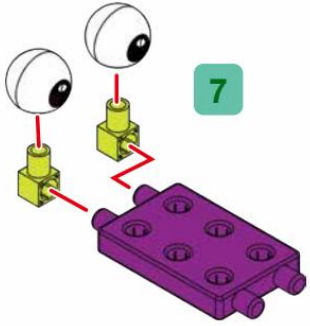

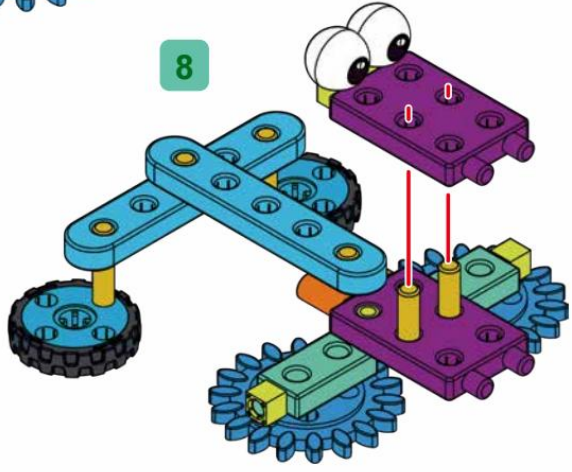

★ 組裝完成囉！
COMPLETED!

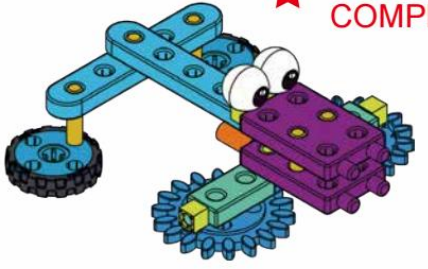

Model 10
路可 Duck Robot Luke
×2
×1
A
×2
×2
×2
×4
×2
×2
B
×2
×2
×1
×4
×2
×2
×1
×1
×1
×2

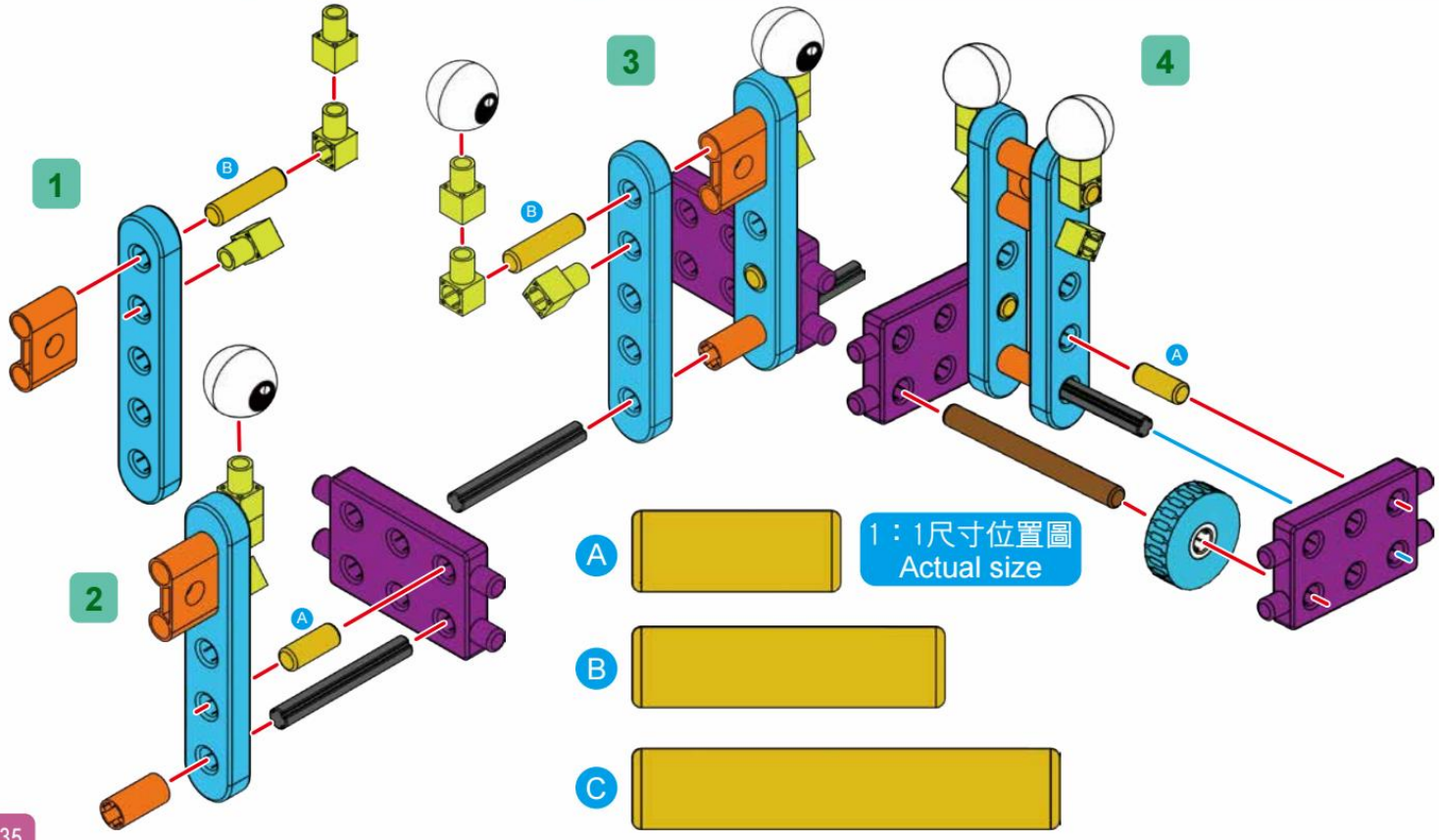
1
2
3
4
A
B
1：1尺寸位置圖
Actual size
A
B
C

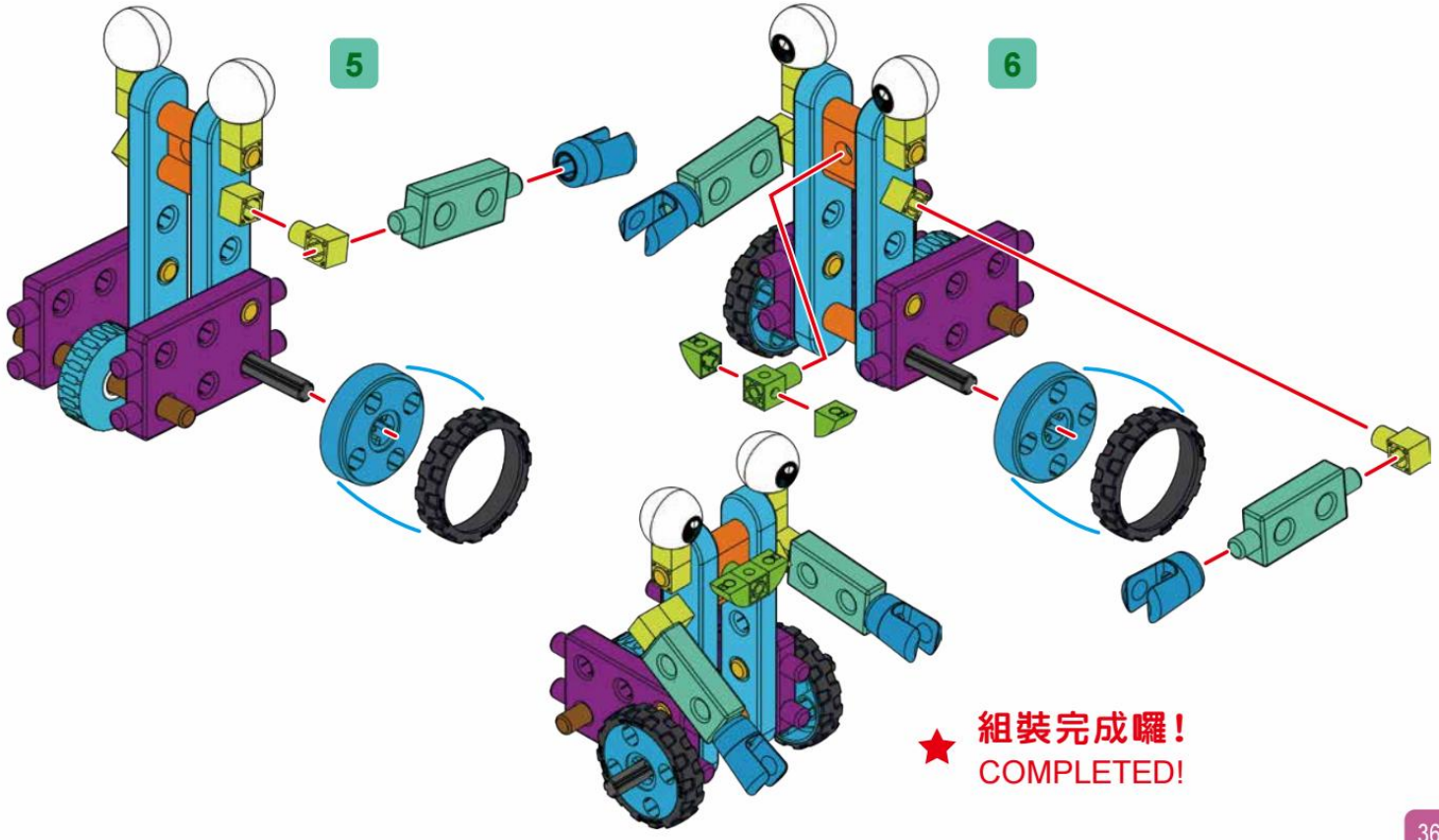
5
6
組裝完成囉！
COMPLETED!

羅比是機器人工廠的管理人，擁有聰明的頭腦跟靈活的身手，管理著工廠裡的大小事。

（可是圖片中有零件不見了，小朋友來找找看是什麼零件吧！）

Robot Man, a clever and facile administrator, who works at a robot factory, taking good care of everything.

(But some parts are missing; let's find out what they are.)

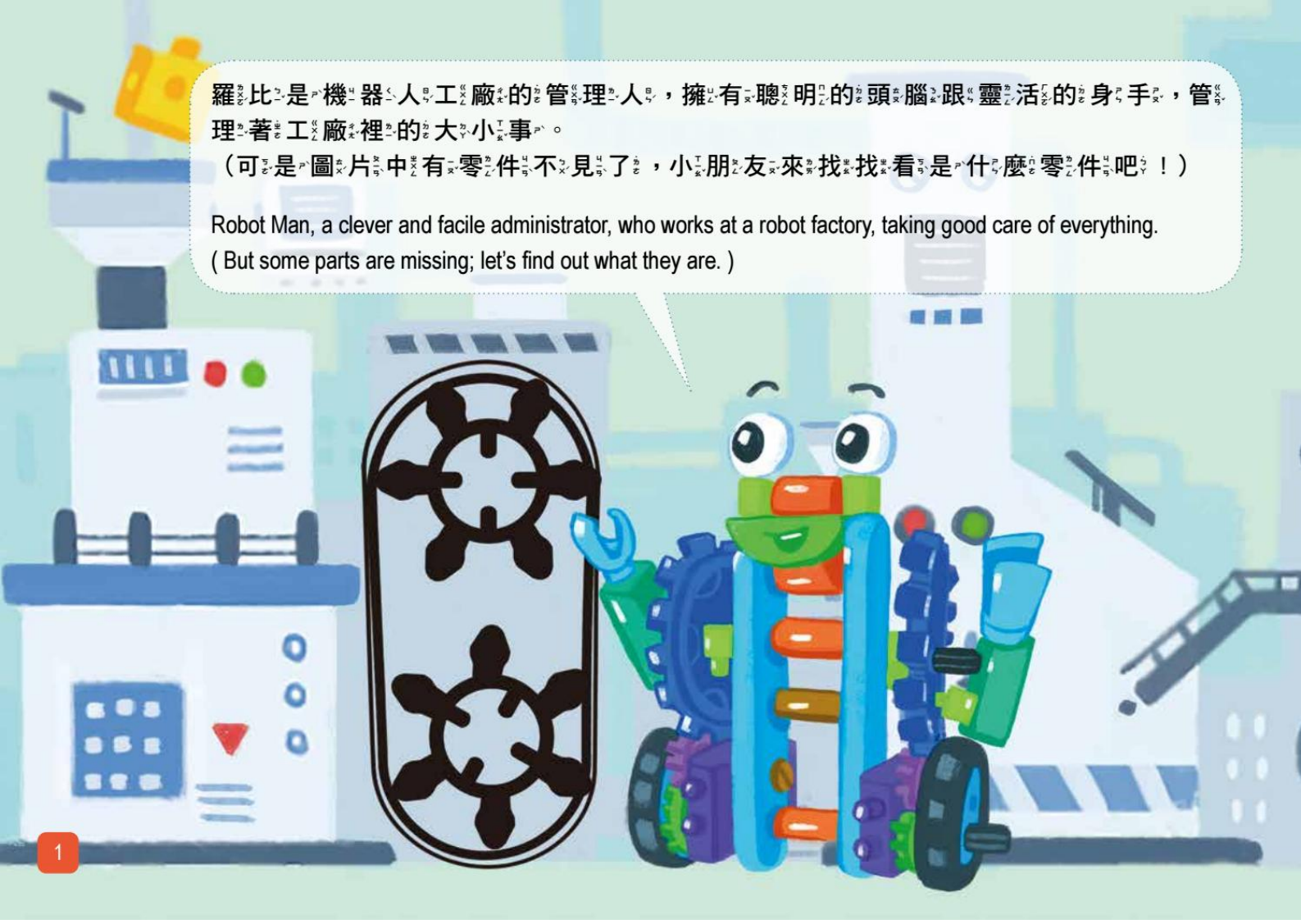

有一天，敏銳的強尼緊張的說，他在角落看到偷偷摸摸的影子。維尼也跟著說他聽到奇怪的聲音，嚇得他連手都掉了。

（小朋友來幫忙找找維尼的手在哪裡吧！）

One day, the facile Three Wheel Robot Johnny nervously said: "I saw a sneaky person around the corner." Head Spinning Robot Winnie also said that he heard something strange, which freaked him out and his hand fell off !

(Let's go finding where his hand is.)

珊咪也說他在工廠的地下室入口看到零件被破壞的痕跡。
（小朋友一起來幫珊咪看看散亂的零件是什麼？）

Flying Robot Sammy also saw the damaged parts right near the entrance of the basement.
(Let's help Flying Robot find what the scattered parts are.)

於是羅比邀請肯尼與佛萊迪也一起來幫忙。
（小朋友來把不同顏色的零件分類吧！）

Therefore, Robot Man asked Crane Robot Kenny and Robot Arm Freddy to go down there together to find out what was going on.
(Let's categorize the parts by colors.)

途中郝迪也一起加入協助，用他靈活的雙手轉開地下室的大門。（小朋友來找找要用什麼零件才可以開門呢？）

On their way, Long Tail Robot Howdy joined them and used his dexterous hands to open the gate in the basement (What components can we use to open the door?)

原來奇怪的叫聲來自路可！
路可說：「因為大家都嫌我太吵了，我只能躲在這裡哭泣。」
羅比回答：「你響亮的嗓門可以替我發號施令，我希望你來幫忙！」

A weird sound was made by Duck Robot Luke. He said: "You guys were saying I was too noisy and therefore I had no choice but hide and cry here." Robot Man replied: "Your exclamatory voice can issue orders for me."

角落的影子原來是洛基！
洛基說：「大家都被我的外表嚇到，所以我只能暫時躲在這裡。」
羅比說：「跟我回工廠吧！我想你矮小的身形可以幫助我們的。」

Another sneaky guy was Crocodile Robot Rocky!
He said: "Everyone was scared of my physical appearance and therefore I could just temporarily hide here." Robot Man said: "Follow me back to the factory. You must have something that I want."

羅西說：「我太專心找尋機器零件，不小心被困在這裡。」
羅比開心的說：「你敏捷的身手正是我需要的！回到團隊吧！」

Following the scattered components, Robert Man found Ninja Robot Rosie . He said: "I was stuck here since I was too concentrating on seeking the parts." Robot Man happily said: "You are a nimble helper. Join our team."

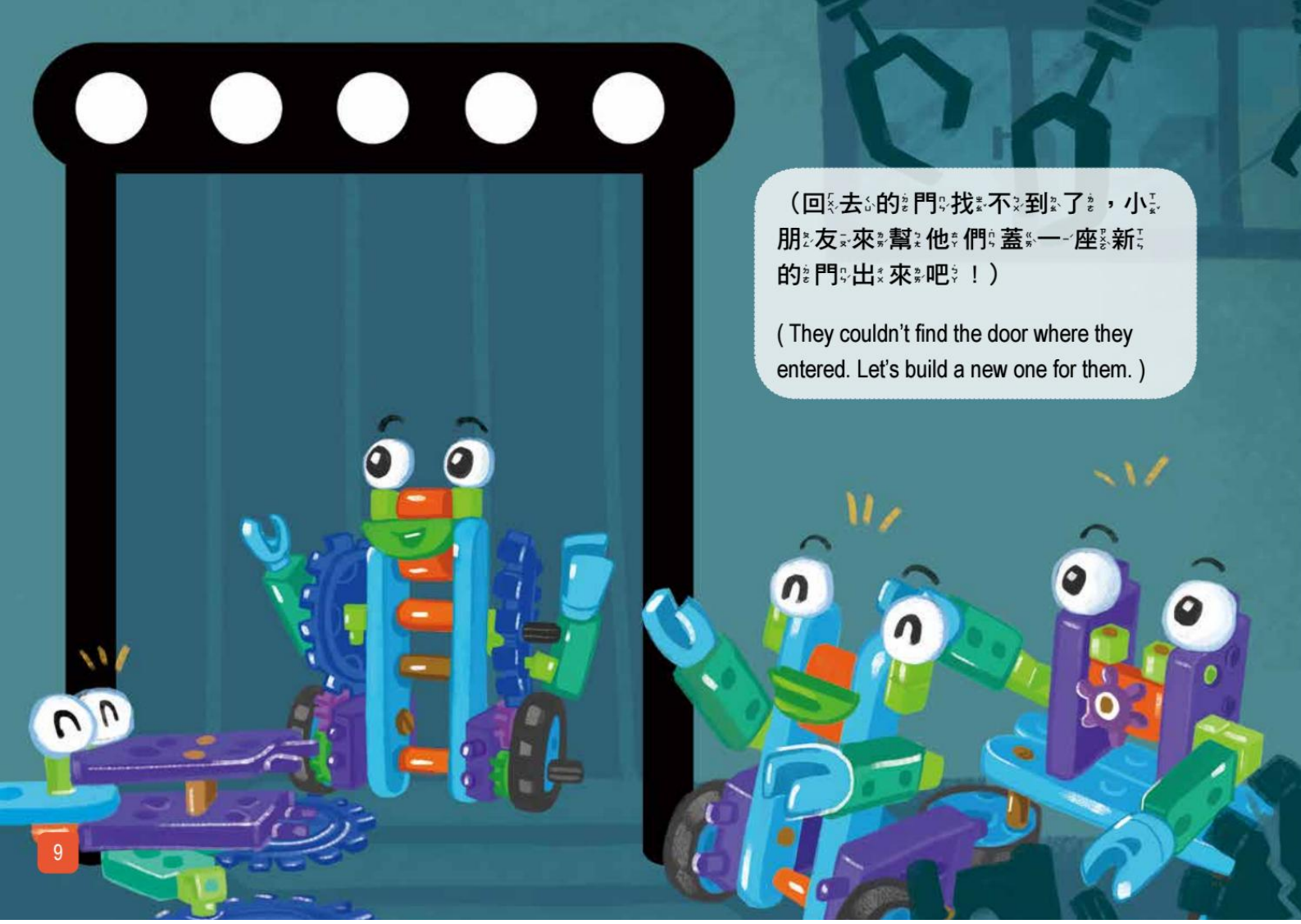
（回去的門找不到了，小朋友來幫他們蓋一座新的門出來吧！）
(They couldn't find the door where they entered. Let's build a new one for them.)

工廠奇怪的謠言破解後，羅比和新朋友們一起開心的工作，工廠也更順利的運行。

The rumor has been clarified. Robot Man and his new friends make the factory work smoothly. Everyone is happily working together in the factory.